950 S/N's 795227 – Current
1150 S/N's 7115537 – Current

RAMROD TASKMASTER

MINI SKID LOADER

MODELS 950, 1150

PARTS MANUAL

RAMROD EQUIPMENT
(A Division of Leon's Mfg. Company Inc.)

Canada
P.O. Box 5002
135 York Road East
Yorkton, Saskatchewan
S3N 3Z4

Phone: (800) 667-1581
Fax: (306) 782-1884

email: sales@ramrodequip.com
web site: www.ramrodequip.com

Rev. December, 2007

Printed in Canada

USING THE PARTS LIST

ITEM

The item number is the identifying number from the illustration.

PART NUMBER

The part numbers that appear in the part number column are 7 digit numbers by which the components may be identified and ordered.

DESCRIPTION

This column contains the name and description of the part.

QUANTITY

This column shows the quantity of each mini-skid component used.

ORDERING PARTS

When ordering parts, be sure to state:

1. Part Number
2. Full Description
3. Quantity Required
4. Mini-Skid Model and Serial Number

NOTES: The references to right and left used throughout this manual refer to the position when operating the machine, facing forward.

Specifications within the manual are subject to change without notice. Parts may not be exactly as shown.

RAMROD TASKMASTER 950/1150 PARTS MANUAL INDEX

TITLE	PAGE
Parts List - Decals	1
Body Assembly	2
Lift & Leveling Arm Assembly	3
Final Drive Assembly	4
Parts List - Main Assembly	5
Track Assembly	8
Parts List - Track Assembly	9
Hydraulic Circuit Diagram	10
Hydraulic Parts Layout	11
Hydraulic Valve Detail	12
Parts List - Hydraulic System	13
Hydraulic Cylinders	16
Parts List - Hydraulic Cylinders	17
27hp Kawasaki Engine (FD750D)	18
Parts List - 27hp Kawasaki Engine (FD750D)	19
Kubota D902 Diesel Engine	20
Parts List - Kubota D902 Diesel Engine	21
Hydraulic Oil Cooler Assembly	24
Parts List - Hydraulic Oil Cooler Assembly	25

PARTS LIST - DECALS

PART NO.	DESCRIPTION	QTY.
1178052	DECAL AUX ON-OFF	2
1179163	DECAL HYD. FLUID	1
1179162	DECAL GASOLINE	1
1179073	DECAL DIESEL	1
1179150	DECAL OPERATING INSTRUCTIONS	1
1179149	DECAL SAFETY FIRST	1
1178042	DECAL TASKMASTER NO STARS	2
1178041	DECAL TASKMASTER WITH STARS	2
1178044	DECAL PLAIN RAMHEAD LARGE	2
1178043	DECAL PLAIN RAMHEAD SMALL	1
1178047	DECAL 1150	2
1178046	DECAL 950	2
1178054	DECAL MADE IN NORTH AMERICA	1
1179152	DECAL MINI PATENTS	1
1178050	DECAL DASH PANEL	1
1178055	DECAL LIFT POINT	2
1178053	DECAL PUSH TO STOP	1
1178056	DECAL CYLINDER LOCK	1
1178057	DECAL AUXILLIARY POWER	1
1178059	DECAL LIFT AND TILT	1
1178060	DECAL DRIVES	1
1178061	950 LKD DECAL KIT	1
1178062	950 LKG DECAL KIT	1
1178063	1150 LKD DECAL KIT	1
1178064	1150 LKG DECAL KIT	1

BODY ASSEMBLY

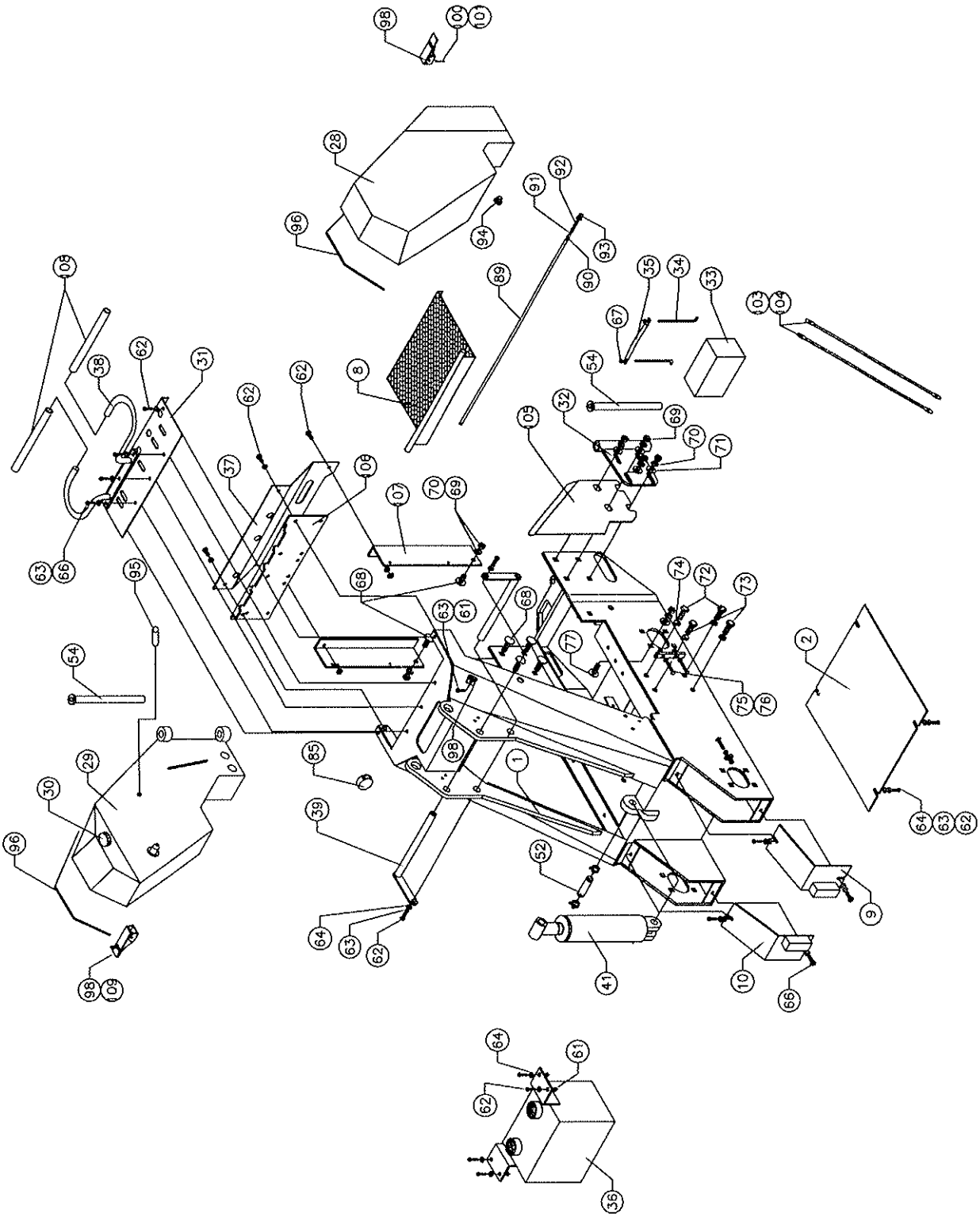

LIFT & LEVELING ARM ASSEMBLY

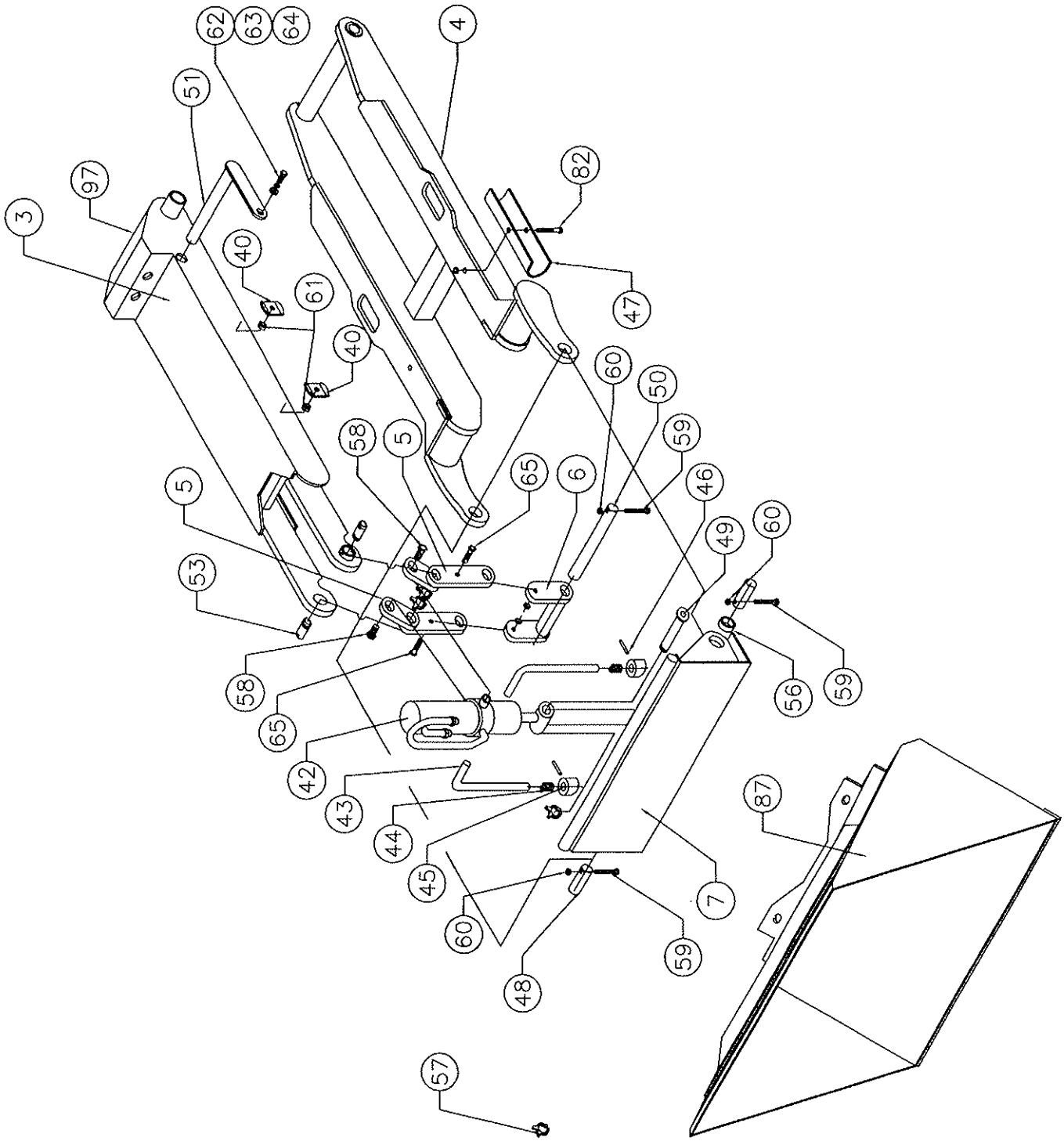

FINAL DRIVE ASSEMBLY

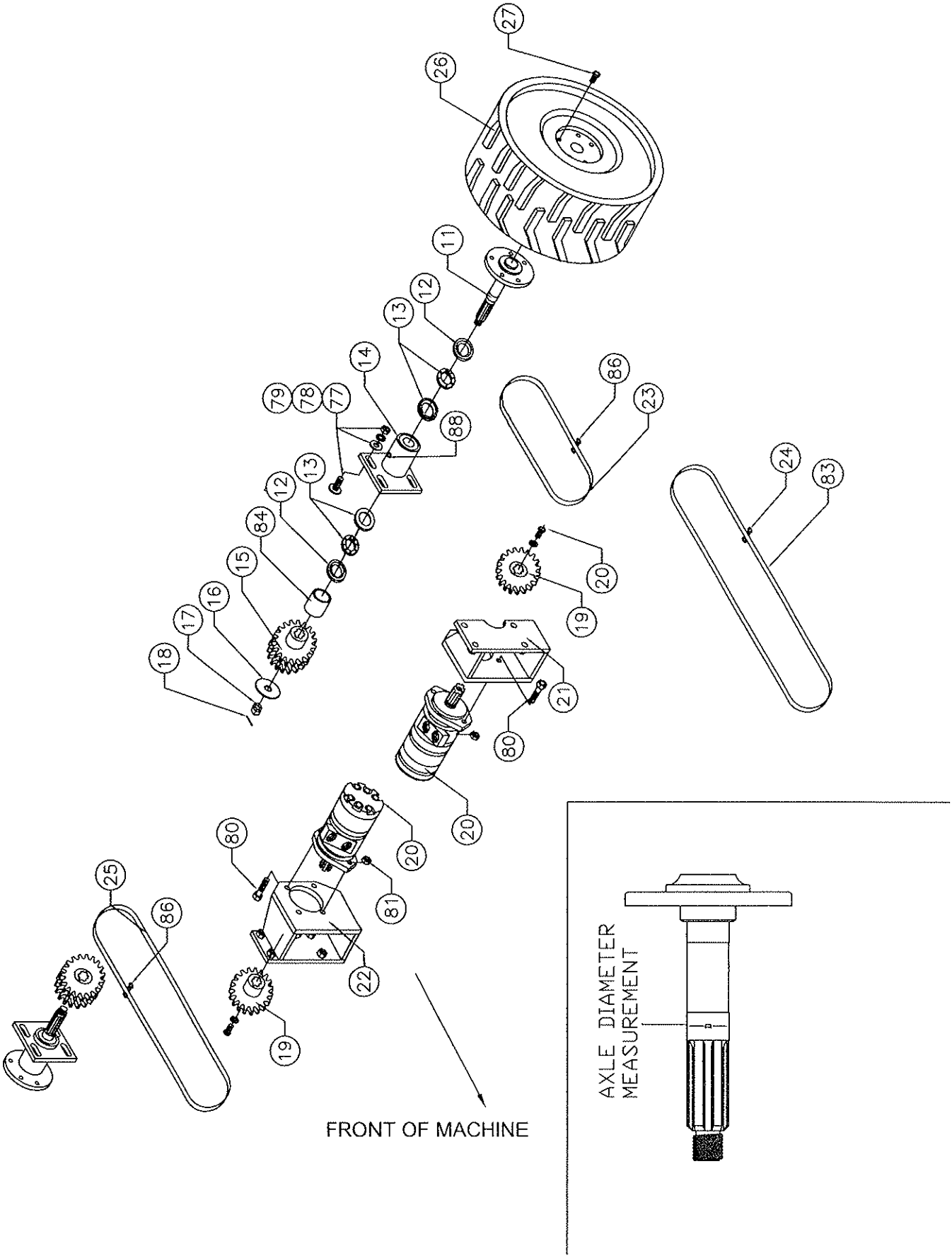

PARTS LIST - MAIN ASSEMBLY

ITEM	PART NO.	DESCRIPTION	QTY.
1	1234301	BODY WELDMENT	1
2	1232806	BOTTOM COVER	1
3	1234425	LIFT FRAME WELDMENT (CURRENT MACHINES)	1
3	1234412	LIFT FRAME WELDMENT	1
4	1234409	LEVELLING FRAME WELDMENT (1 1/8" PINS)	1
5	1231111	SELF LEVELLING LINK LEFT WELDMENT	1
5	1231112	SELF LEVELLING LINK RIGHT WELDMENT	1
6	1231123	CYLINDER SPACER	1
7	1231122	QUICK ATTACH BRACKET	1
8	1232779	FOOT PLATE WELDMENT	1
9	1234180	FRONT COVER WELDMENT LEFT	1
10	1234181	FRONT COVER WELDMENT RIGHT	1
11	1240021	AXLE 1 1/2" SHAFT (2 PER TRACK, 4 PER WHEEL)	2/4
11	1234332	AXLE 1 3/4" SHAFT (2 PER TRACK, 4 PER WHEEL)	2/4
12	1135338	GREASE SEAL 1 1/2" SHAFT (4 PER TRACK, 8 PER WHEEL)	4/8
12	1135336	GREASE SEAL 1 3/4" SHAFT (4 PER TRACK, 8 PER WHEEL)	4/8
13	1135339	BEARING AND RACE 1 1/2" SHAFT (4 PER TRACK, 8 PER WHEEL)	4/8
13	1135337	BEARING AND RACE 1 3/4" SHAFT (4 PER TRACK, 8 PER WHEEL)	4/8
14	1240022	HUB WELDMENT 1 1/2" SHAFT (2 PER TRACK, 4 PER WHEEL)	2/4
14	1234331	HUB WELDMENT 1 3/4" SHAFT (2 PER TRACK, 4 PER WHEEL)	2/4
15	1240003	SPROCKET, 1 3/8 AND 1 1/2" AXLES (2 PER TRACK, 4 PER WHEEL)	2/4
15	1234333	SPROCKET, 1 3/4" AXLES (2 PER WHEEL MACHINE)	2
15	1234440	SPROCKET, 1 3/4" AXLES (REAR AXLES ONLY)	2
16	1102639	HEAVY DUTY 3/4" WASHER	2
16	1102639	HEAVY DUTY 3/4" WASHER	4
17	1102562	SLOTTED NUT (TRACK MACHINE)	2
17	1102562	SLOTTED NUT (WHEEL MACHINE)	4
18	1102768	COTTER PIN (TRACK MACHINE)	2
18	1102768	COTTER PIN (WHEEL MACHINE)	4
19	1240004	SPROCKET	2
20	1127461	HYDRAULIC MOTOR WITH BOLT AND FLAT WASHER	2
21	1232774L	HYDRAULIC MOTOR MOUNT LEFT (WHEEL MACHINE)	1
21	1234322	HYDRAULIC MOTOR MOUNT LEFT (TRACK MACHINE)	1
22	1232774R	HYDRAULIC MOTOR MOUNT RIGHT (WHEEL MACHINE)	1
22	1234323	HYDRAULIC MOTOR MOUNT RIGHT (TRACK MACHINE)	1
23	1113408	SHORT MOTOR CHAIN, 35 PITCHES	1
24	1113376	#60H CONNECTING LINK	2
25	1113407	LONG MOTOR CHAIN 51 PITCHES	1
26	1135164	WHEEL ASSEMBLY (SPECIFY SIZE)	4
27	1102509	WHEEL BOLT (TRACK MACHINE)	10
27	1102509	WHEEL BOLT (WHEEL MACHINE)	20
28	1240006L	LEFT TANK WELDMENT (FUEL)	1
29	1240006R	RIGHT TANK WELDMENT (OIL)	1
30	1179194	OIL FILLER CAP (FLAT)	2
30	1190064	OIL FILLER CAP (DOMED)	2
31	1234207	CONTROL COVER PLATE	1
32	1232803	TANK MOUNT WELDMENT	2
33	1179130	BATTERY	1
34	1230533	SHORT BATTERY TIE DOWN BOLT	2
35	1233158	BATTERY CROSS BAR - LONG	1
36	1232792	FRONT HYDRAULIC TANK	1

37	1234355	TOP COVER (KUBOTA DIESEL)	1
37	1234204	TOP COVER (GAS MODELS)	1
38	1240010	OPERATOR BAR	1
39	1233149	1 1/8" LIFT ARM PIN	2
40	1707130	2 LINE CLAMP	2
41	SEE HYD.	LIFT CYLINDER	1
42	1127336	TILT CYLINDER	1
43	1231118	QUICK ATTACH PIN	2
44	1105620	SPRING	2
45	1231120	PIN PIVOT	2
46	1102762	COTTER PIN, 3/16" X 2"	2
47	1234190	CYLINDR BLOCK	1
48	1231047	DRILLED PIN 1" X 2 11/16" LG	2
49	1231044	GROOVE PIN 1" X 3 1/2" LG	1
50	1231075	DRILLED PIN 1" X 9" LG	1
51	1233148	1 1/8" LIFT CYLINDER PIN	1
52	1235090	GROOVE PIN 1" X 3 7/8" LG	1
53	1231073	PIN 1" X 2 15/16" LG.	2
54	1233164	TANK PIVOT PIN 1" X 12 1/2" LG	2
56	1115510	TENSION BUSHING (PIVOT POINTS)	12
57	1500115	PIN RETAINER	5
58	1231171	CYLINDER RETAINING BOLT, 1/2" UNC X 3/4"	2
59	1101954	HEX BOLT 5/16" UNC X 2" LG	3
60	1102521	LOCK NUT 5/16" UNC	3
61	1102536	LOCK NUT 3/8" UNC	11
62	1102001	HEX BOLT 3/8" UNC X 1" LG	19
63	1102590	LOCKWASHER 3/8"	12
64	1102609	FLAT WASHER 3/8"	21
65	1102002	HEX BOLT 3/8" UNC X 1 1/2" LG	2
66	1101998	HEX BOLT 3/8" UNC X 1 1/4" LG	7
67	1102516	LOCK NUT1/4" UNC	2
68	1102380	CARRIAGE BOLT 1/2" UNC X 1 1/2" LG	10
69	1102535	HEX NUT 1/2" UNC	10
70	1102592	LOCKWASHER 1/2" .	10
71	1102611	FLAT WASHER 1/2"	8
72	1102102	HEX BOLT 5/8" UNC X 2" LG (WHEEL MACHINE)	8
72	1102098	HEX BOLT 5/8" UNC X 1 1/4" LG (TRACK MACHINE)	4
73	1102101	HEX BOLT 5/8" UNC X 1 3/4" LG (TRACK MACHINE)	4
74	1102594	LOCKWASHER 5/8" (WHEEL MACHINE)	16
74	1102594	LOCKWASHER 5/8" (TRACK MACHINE)	12
75	1102477	SET SCREW SQUARE HEAD 3/8" X 2" LG (WHEEL MACHINE)	6
75	1102477	SET SCREW SQUARE HEAD 3/8" X 2" LG (TRACK MACHINE)	4
76	1102525	HEX NUT 3/8" UNC (WHEEL MACHINE)	12
76	1102525	HEX NUT 3/8" UNC (TRACK MACHINE)	8
77	1102395	CARRIAGE BOLT 5/8" UNC X 2" LG (WHEEL MACHINE)	16
77	1102395	CARRIAGE BOLT 5/8" UNC X 2" LG (TRACK MACHINE)	12
78	1102613	FLAT WASHER 5/8" (WHEEL MACHINE)	16
78	1102613	FLAT WASHER 5/8" (TRACK MACHINE)	8
79	1102540	HEX NUT 5/8" UNC (WHEEL MACHINE)	16
79	1102540	HEX NUT 5/8" UNC (TRACK MACHINE)	12
80	1107509	HEX BOLT 14MM X 2.0P X 60 MM LG	4
81	1107156	LOCK NUT 14MM X 2.0P	4
82	1102006	HEX BOLT 3/8" UNC X 3 1/2" LG	1

83	1113372	WHEEL CHAIN, 93 PITCHES (WHEEL MACHINE)	2
84	1240023	SLEEVE 1 1/2" SHAFT (2 PER TRACK, 4 PER WHEEL MACHINE)	2/4
84	1234159	SLEEVE 1 3/4" SHAFT (2 PER TRACK, 4 PER WHEEL MACHINE)	2/4
85	1190017	LIGHT	2
86	1113379	#60H CONNECTING LINK, ANSI	2
87	1231024	BUCKET 31" WIDE	1
87	1231027	BUCKET 36" WIDE	1
87	1232995	BUCKET 44" WIDE	1
88	1122759	1/4" GREASE ZERK (TRACK MACHINE)	9
88	1122759	1/4" GREASE ZERK (WHEEL MACHINE)	11
89	1190045	1/4" FUEL LINE X 38" LG	1
90	1123184	1/4" HOSE GEAR CLAMP	2
91	1234712	1/4" HOSE BARB X 1/4" NPTM	1
92	1124711	SHUT OFF VALVE	1
93	1122901	3/4" NPTM X 1/4" NPTF BRASS BUSHING	1
94	1122920	1/2" NPT STEEL PLUG	2
95	1125845	LEVEL SENDING UNIT	2
96	1190025	TANK RUBBER	2
97	1190026	LIFT ARM RUBBER	1
98	1784300	DRAW LATCH	2
99	1115516	1" LONG TENSION BUSHINGS, ON TILT CYLINDER PIVOTS	2
100	1101943	NO. 10-24 X 3/4" LG SCREW	10
101	1102578	NO. 10-24 LOCKNUT	10
103	1230271	BATTERY CABLE X 24"	1
104	1230271	BATTERY CABLE X 24"	1
105	1234157/158	TANK HEAT SHIELD (L & R)	2
105	1234166/167	TANK HEAT SHIELD (L & R), DAEDONG ENGINES	2
106	1234300	VALVE MOUNT PLATE	1
107	1232809/810	UPRIGHT ANGLES (L & R)	2
108	1190086	HANDLEBAR TUBING	2
109	1784301	LATCH KEEPER	1
110	1234533	TACH/HOURMETER (NOT SHOWN)	1
NS	1234327	POSITIVE BATTERY TERMINAL COVER	1

TRACK ASSEMBLY

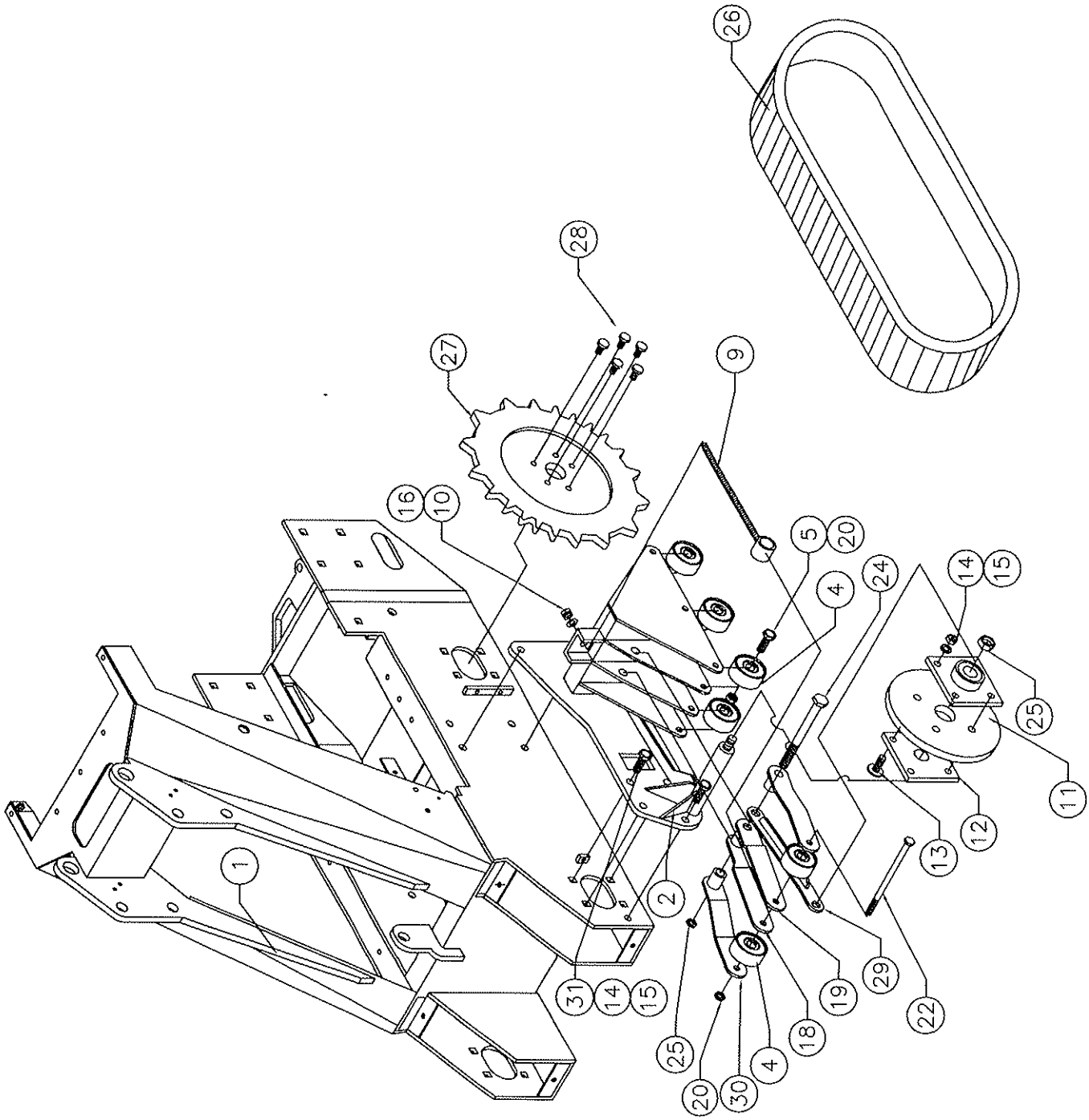

PARTS LIST - TRACK ASSEMBLY

ITEM	PART NO.	DESCRIPTION	QTY.
1	1234301	BODY WELDMENT	1
2	1234416L	TRACK FRAME LEFT	1
2	1234290L	TRACK FRAME (PRE 2005 MODELS)	0
3	1234416R	TRACK FRAME RIGHT (NOT SHOWN)	1
3	1234290R	TRACK FRAME (PRE 2005 MODELS)	0
4	1232936	TRACK ROLLER	16
5	1102057	HEX BOLT 1/2" UNC X 3 1/2" LG	12
9	1234135	TENSIONER ARM	2
10	1102537	LOCK NUT 1/2" UNC	2
11	1232847	FRONT IDLER WHEEL	2
12	1117176	BEARING CASTING	4
13	1102104	HEX BOLT 5/8" UNC X 3" LG	8
14	1102594	LOCKWASHER 5/8"	12
15	1102540	HEX NUT 5/8" UNC	12
16	1102611	1/2" FLATWASHER	2
18	1232827	IDLER MOUNT INNER SET	2
19	1232828	IDLER MOUNT OUTER SET	2
20	1102537	LOCKNUT 1/2" UNC	14
22	1102068	HEX BOLT 1/2" UNC X 9" LG	2
24	1105250	HEX BOLT 3/4" UNC X 8" LG	2
25	1102551	LOCKNUT 3/4" UNC	4
26	1232930C	RUBBER TRACK	2
27	1232926	DRIVER SPROCKET	2
28	1102509	WHEEL BOLT 1/2" UNF X 7/8" LG, 60DEG. TAPER	10
29	1234506	FRONT AXLE REINFORCEMENT	2
30	1234099	IDLER ARM WELDMENT	2
31	1102102	HEX BOLT 5/8" UNC X 2" LG	4

HYDRAULIC CIRCUIT DIAGRAM

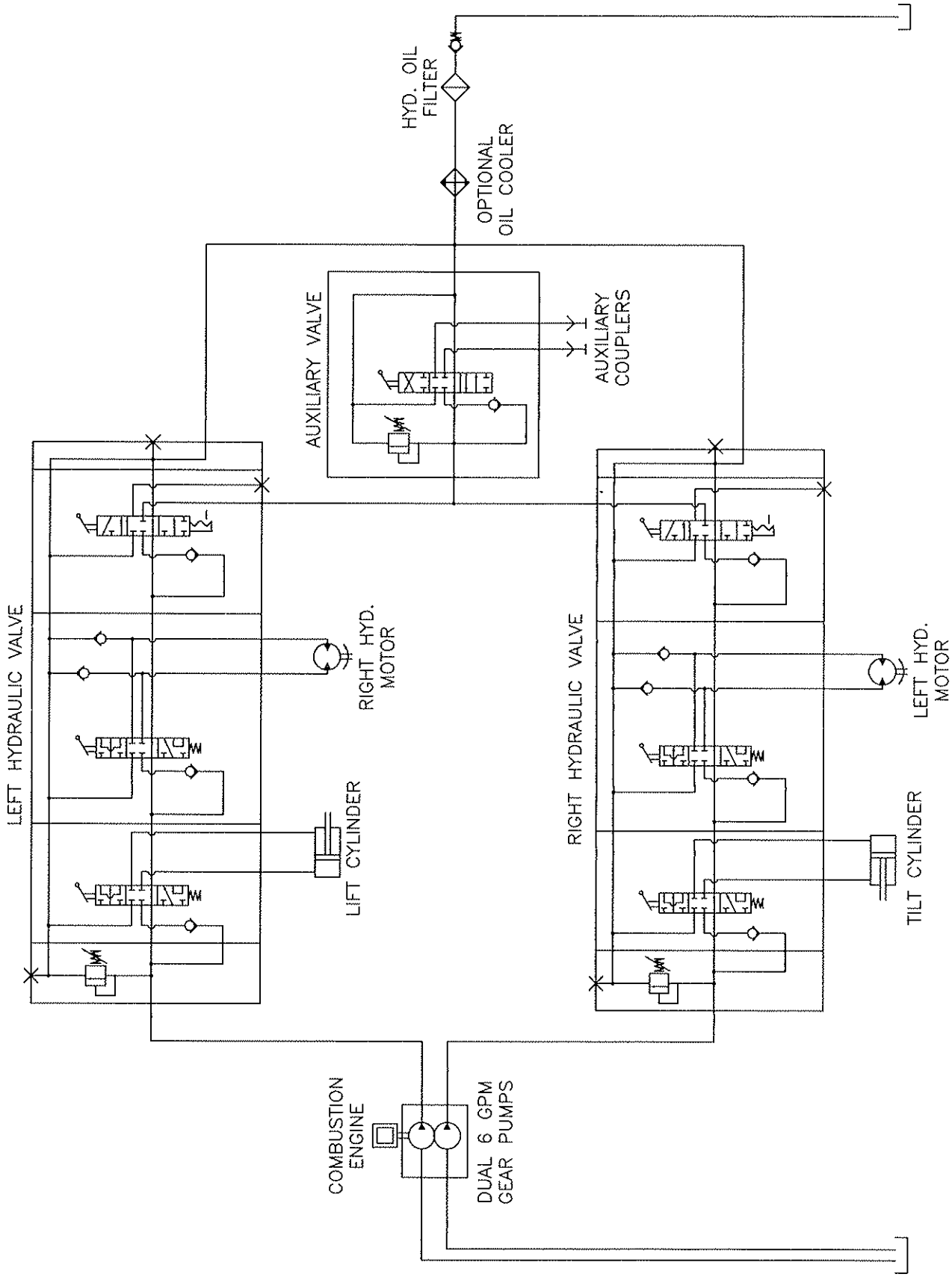

HYDRAULIC PARTS LAYOUT

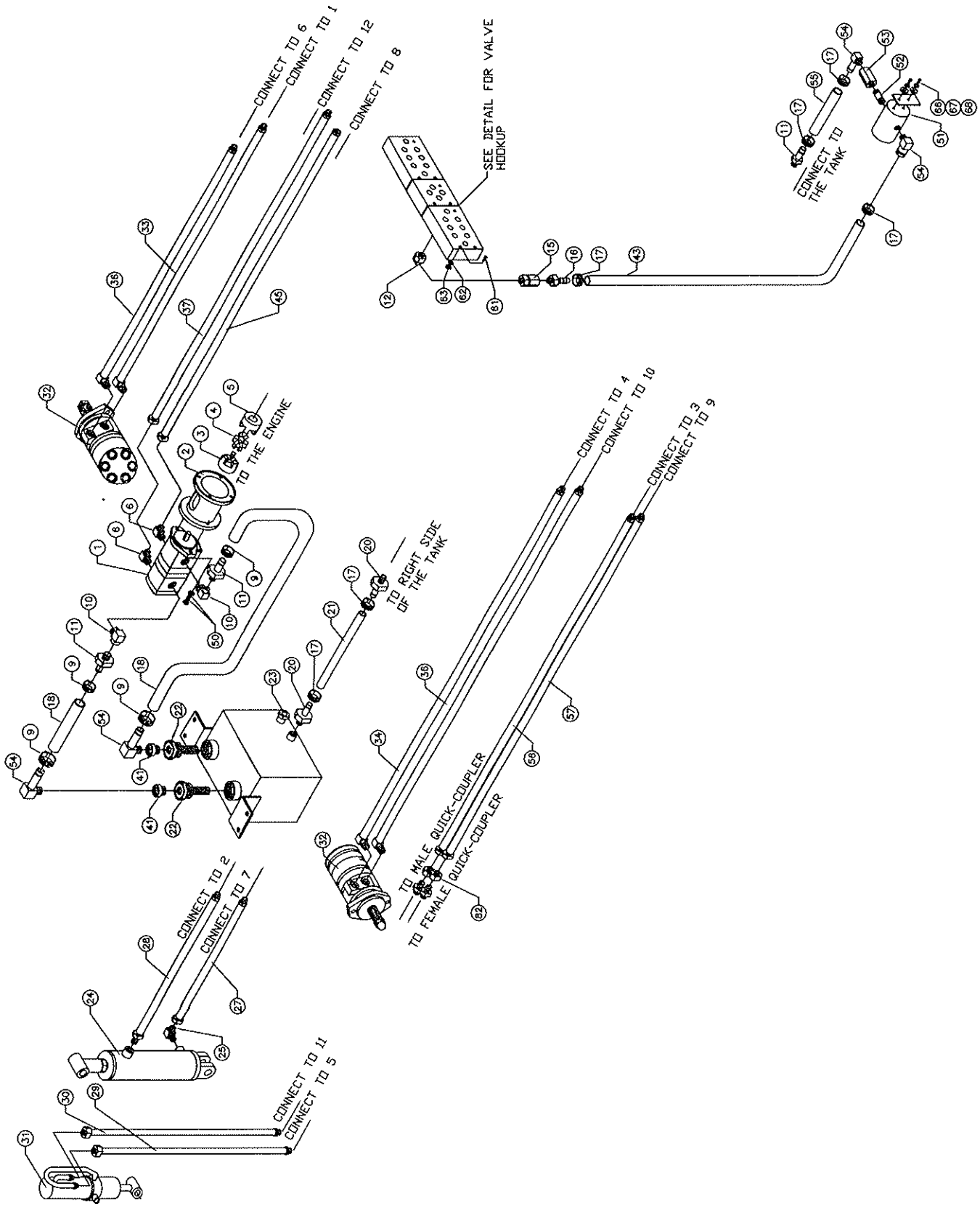

HYDRAULIC VALVE DETAIL

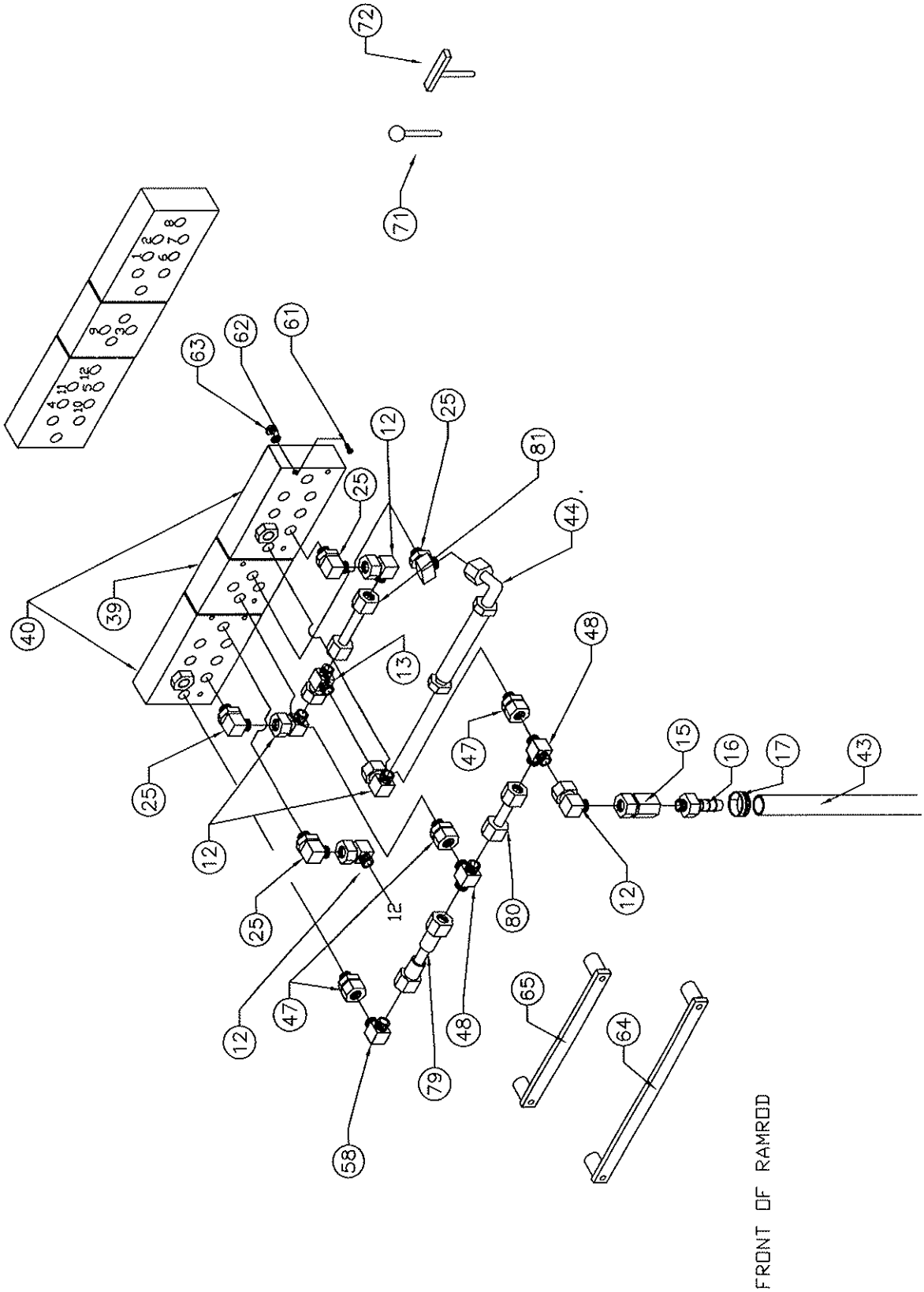

PARTS LIST - HYDRAULIC SYSTEM

ITEM	PART NO.	DESCRIPTION	QTY.
1	1234445	DUAL INLET GEAR PUMP, 6cc/SECTION (RH ROTATION - GAS ENGINES)	1
1	1234446	DUAL INLET GEAR PUMP, 6cc/SECTION (LH ROTATION - DIESEL ENGINES)	1
2	1230351	PUMP MOUNT	1
3	1117180	5/8" COUPLER HALF	1
4	1117076	SPYDER	1
5	1117181	1 1/8" COUPLER HALF	1
6	1190046	ELBOW 90, 7/8" ORBM SW X 3/4-16 JICM	2
9	1190053	1" HOSE CLAMP	2
10	1122941	ELBOW 90, 1 1/16-12 ORBM X 3/4-14 NPTF SW	1
11	1190044	ADAPTER, 3/4-14 NPTM X 3/4" HOSE BARB	3
12	1124405	ELBOW 90, 3/4 - 16 JICM X 3/4 - 16 JICF SW	5
13	1124422	BRANCH TEE, 3/4-16 JICF SW X 3/4-16 JICM (2)	1
15	1190059	ADAPTER 3/4-16 JICF SW X 1/2" NPTF	1
16	1190060	COUPLER, 1/2" NPTM X 3/4" HOSE BARB	1
17	1190054	3/4" HOSE CLAMP	6
18	1123592	HYDRUALIC HOSE 3/4" X 22" LG	1
20	1190057	ADAPTER, 1-11 1/2 NPTM X 1" HOSE BARB	2
21	1190115	HYDRAULIC HOSE 1" X 44" LG	1
22	1190041	TANK STRAINER	1
23	1122921	PLUG 3/4" NPTM	2
24	1127485	LIFT CYLINDER 3 BORE X 10.188 STROKE (NEW CYLINDER)	1
24	1127351	LIFT CYLINDER 3.5 BORE X 9.125 STROKE (OLD STYLE)	1
25	1123210	ELBOW 90, 3/4 - 16 JICM X 3/4 - 16 ORBM	5
27	1123568	HYDRAULIC HOSE 3/8" X 34 1/2" LG, 3/4 - 16 JICF SW X 3/4 - 16 ORBM SW	1
28	1123569	HYDRAULIC HOSE 3/8" X 25" LG, 3/4 - 16 ORBM X 3/4 - 16 ORBM SW	1
29	1123570	HYDRAULIC HOSE 3/8" X 80" LG, 3/4 - 16 JICF SW X 3/4 - 16 ORBM SW	1
30	1123571	HYDRAULIC HOSE 3/8" X 76" LG, 3/4 - 16 JICF SW X 3/4 - 16 ORBM SW	1
31	1127336	TILT CYLINDER	1
32	1127461	DRIVE MOTOR PARKER	2
33	1123574	HYD. HOSE 1/2" X 47" LG, 7/8 - 14 ORBM 90 DEG. SW X 3/4 - 16 ORBM SW	1
33	1123575	HYD. HOSE 1/2" X 52" LG (KUBOTA, SEE 36 FOR DESCRIPTION)	1
34	1123575	HYD. HOSE 1/2" X 52" LG, 7/8 - 14 ORBM 90 DEG. SW X 3/4 - 16 ORBM SW	1
34	1123574	HYD. HOSE 1/2" X 47" LG, (DAEDONG, SEE 33 FOR DESCRIPTION)	1
36	1123575	HYD. HOSE 1/2" X 52" LG, 7/8 - 14 ORBM 90 DEG. SW X 3/4 - 16 ORBM SW	2
37	1123576	HYDRAULIC HOSE 1/2" X 36" LG, 3/4 - 16 ORBM SW X 3/4 - 16 JICF SW	1
37	1123606	HYD H. 1/2" X 30" LG, 3/4 ORBM SW X 3/4 JICF SW (KUBOTA, DAEDONG)	1
39	1125841	1 LEVER VALVE	1
40	1125840	3 LEVER VALVE	2
41	1190114	ADAPTER, 3/4-14 NPTF X 1-11 1/2 NPTM	1
43	1123581	SUCTION/RETURN HOSE 3/4" X 41" LG	1
43	1190052	SUCTION/RETURN HOSE 3/4" X 44" LG (COOLER UNITS ONLY)	1
44	1123591	HYD. HOSE, 3/8" X 7 LG. 3/4 - 16 JICF SW X 3/4 - 16 JICF 90 DEG SW	1
45	1123583	HYDRAULIC HOSE 1/2" X 30" LG, 3/4 - 16 JICF SW (2)	1
45	1123605	HYD. HOSE 1/2" X 24" LG, 3/4 - 16 JICF SW (2) (DAEDONG)	1
47	1123585	ADAPTER, 3/4 - 16 JICF SW X 3/4 - 16 ORBM	3
48	1122828	TEE, 3/4 - 16 JICM (3)	2
49	1101998	BOLT 3/8" X 1 1/4" LG	2
50	1102590	LOCKWASHER 3/8" DIA	2
51	1190042	FILTER ASSEMBLY	1
51	1190065	CARTRIDGE FOR FILTER ASSEMBLY	1
52	1122894	ADAPTER 3/4" NPTM X 3/4" NPTM	1

53	1190058	CHECK VALVE 3/4" NPTF X 3/4" NPTF	1
54	1190043	ELBOW 90, 3/4" NPTM X 3/4" HOSE BARB	3
55	1190051	HYDRAULIC HOSE 3/4" X 26" LG	1
56	1123614	HYDRAULIC HOSE 3/8" X 35" LG, 3/4 -16 JICF SW X 3/4 - 16 ORBM SW	1
57	1123615	HYDRAULIC HOSE 3/8" X 31" LG, 3/4 -16 JICF SW X 3/4 - 16 ORBM SW	1
58	1123587	ELBOW 90, 3/4 - 16 JICM (2)	1
59	1127456	COUPLER, FEMALE 1/2" NPTF, TEMA, (NOT SHOWN)	1
60	1127457	COUPLER, MALE 1/2" NPTM, TEMA, (NOT SHOWN)	1
61	1101953	BOLT 5/16" X 1 3/4" LG	9
62	1102589	LOCKWASHER 5/16" DIA	9
63	1102520	HEX NUT 5/16" DIA	9
64	1233144	LONG CONTROL BAR WELDMENT	1
65	1233145	SHORT CONTROL BAR WELDMENT	1
66	1101923	BOLT 1/4" UNC X 3/4" LG	2
67	1102588	LOCKWASHER 1/4" DIA	2
68	1102607	FLATWASHER 1/4" DIA	2
69	1190061	HOSE PROTECTOR 93075 3/8" X 20" LG FOR TILT CYL. (NOT SHOWN)	2
70	1122920	PLUG 1/2" NPTM NOT SHOWN	2
71	1190066	CONTROL LEVER	5
72	1190067	T-HANDLE	2
73	1190068	HYDRAULIC PUMP SEAL KIT (NOT SHOWN)	1
74	1190069	HYDRAULIC MOTOR SEAL KIT (NOT SHOWN)	1
75	1125130	LIFT CYLINDER SEAL KIT (NOT SHOWN)	1
76	1128406	TILT CYLINDER SEAL KIT (NOT SHOWN)	1
77	1190071	1 LEVER VALVE SEAL KIT (NOT SHOWN)	1
78	1190072	3 LEVER VALVE SEAL KIT (NOT SHOWN)	1
79	1124372	HYDRAULIC HOSE 3/8" X 6 1/4" LG., 3/4-16 JICF SW (2)	1
80	1123589	PIPE LINE - 2.5" LG.	1
81	1123590	PIPE LINE - 7.9" LG.	1
82	1190099	BULKHEAD FITTING, 3/4" JICM X 1/2" NPTM	2

LIFT CYLINDER

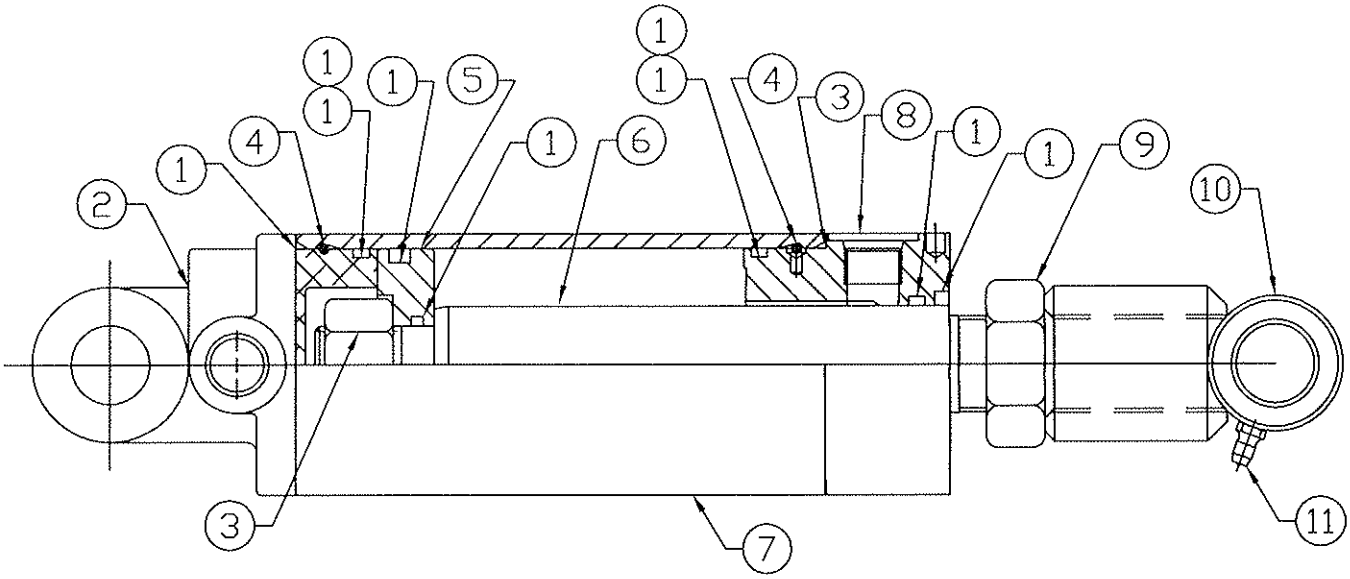

TILT CYLINDER

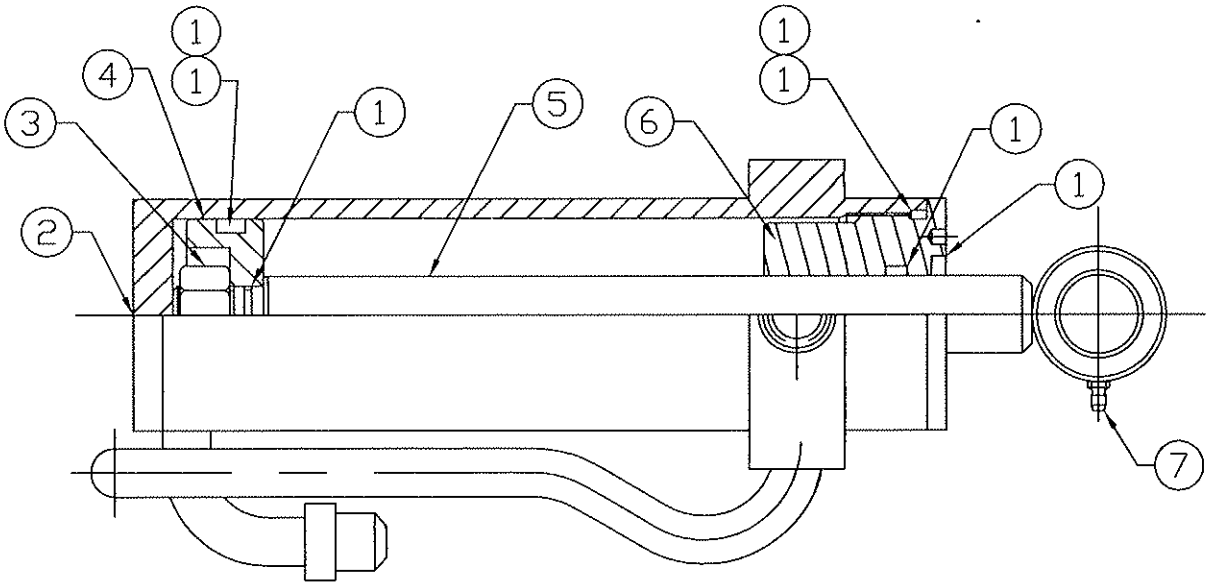

PARTS LIST - LIFT CYLINDER

ITEM	PART NO.	DESCRIPTION	QTY.
1	1125130	LIFT CYLINDER SEAL KIT	1
2	1125131	BUTT CLEVIS	1
3	1125132	LOCKNUT	1
4	1125133	RETAINING WIRE	2
5	1125134	PISTON	1
6	1125135	SHAFT	1
7	1125136	BARREL	1
8	1125137	CYLINDER HEAD	1
9	1125138	JAM NUT	1
10	1125139	CROSS TUBE	1
11	1122759	GREASE ZERK	1

PARTS LIST - TILT CYLINDER

ITEM	PART NO.	DESCRIPTION	QTY.
1	1128406	TILT CYLINDER SEAL KIT	1
2	1125115	BARREL	1
3	1125114	LOCKNUT	1
4	1125113	PISTON	1
5	1125112	SHAFT	1
6	1125111	GLAND	1
7	1122759	GREASE ZERK	1

27hp KAWASAKI ENGINE (FD750D)

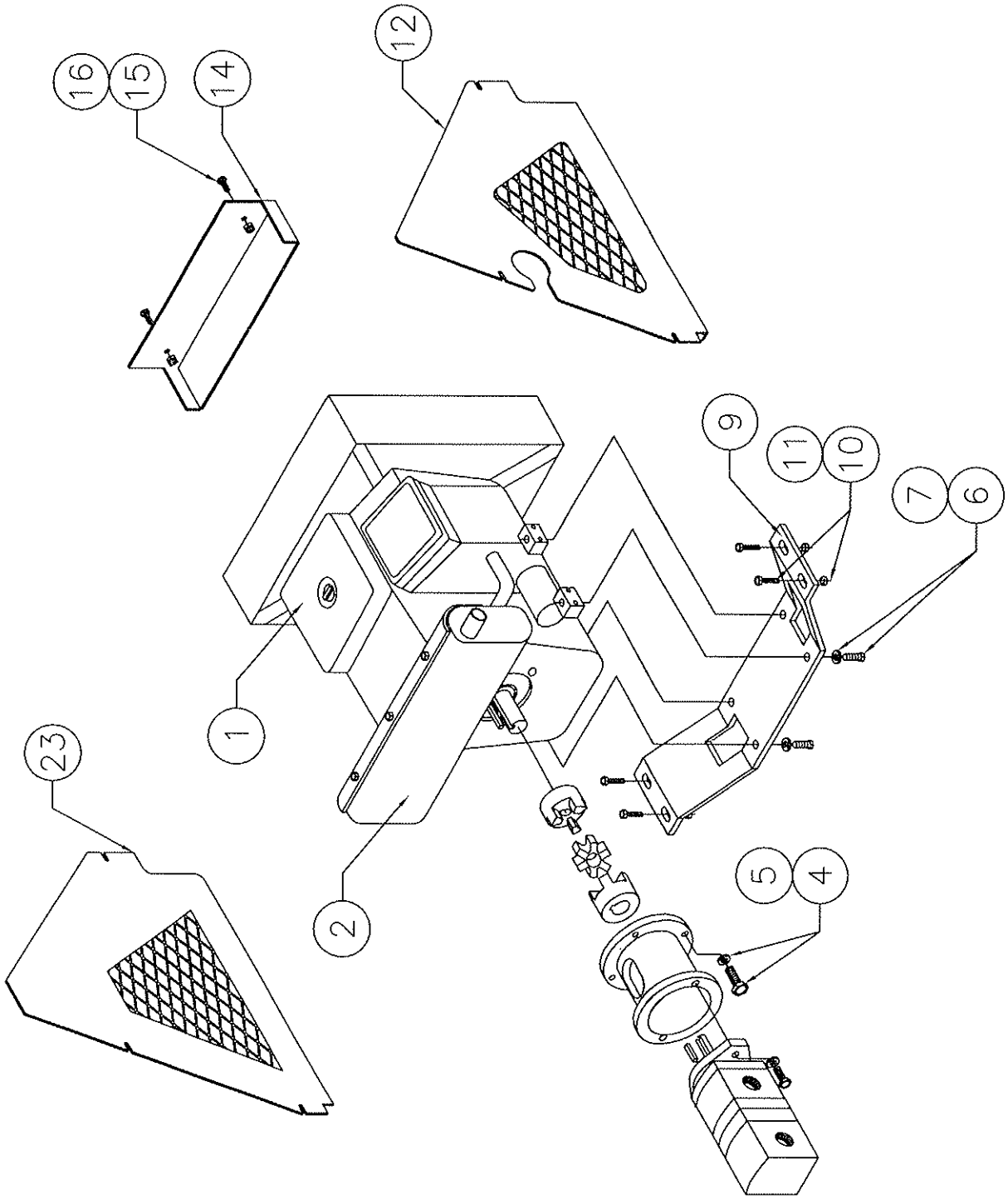

PARTS LIST - 27hp KAWASAKI ENGINE (FD750D)

ITEM	PART NO.	DESCRIPTION	QTY.
1	1190010	KAWASAKI ENGINE (FD750D)	1
2	1190011	KAWASAKI EXHAUST PACKAGE	1
3	1190014	KEY SWITCH (NOT SHOWN)	1
4	1107358	HEX BOLT M8 X 1.25P X 25MM LG	4
5	1102589	LOCKWASHER 5/16" DIA	4
6	1107409	HEX BOLT M10 X 1.5P X 35MM LG	4
7	1102591	LOCKWASHER 7/16" DIA	4
8	1190022	INDICATOR LIGHT (NOT SHOWN)	4
9	1233163	MOUNT PLATE	1
10	1102002	HEX BOLT 3/8" UNC X 1 1/2" LG	4
11	1102536	LOCKNUT 3/8" UNC	4
12	1234277	LEFT SIDE SHIELD	1
14	1234213	KAWASAKI BOTTOM SHIELD	1
15	1101923	HEX BOLT 1/4" UNC X 3/4" LG	2
16	1102516	LOCKNUT 1/4" DIA	2
17	1101943	NO . 10-24 X 3/4" LG MACHINED SCREW	2
18	1102578	LOCKNUT NO. 10-24	2
19	1107419	HEX BOLT M10 X 1.5P X 20MM LG (NOT SHOWN)	2
20	1102590	LOCKWASHER 3/8" DIA (NOT SHOWN)	2
21	1190012	CHOKE CABLE 60-122 (NOT SHOWN)	1
22	1190013	THROTTLE CABLE 60-028 (NOT SHOWN)	1
23	1234279	RIGHT SIDE SHIELD	1
24	1190073	REPLACEMENT OIL FILTER (NOT SHOWN)	1
25	1190074	REPLACEMENT AIR FILTER (NOT SHOWN)	1
26	1190075	REPLACEMENT FUEL FILTER (NOT SHOWN)	1

KUBOTA D902 DIESEL ENGINE

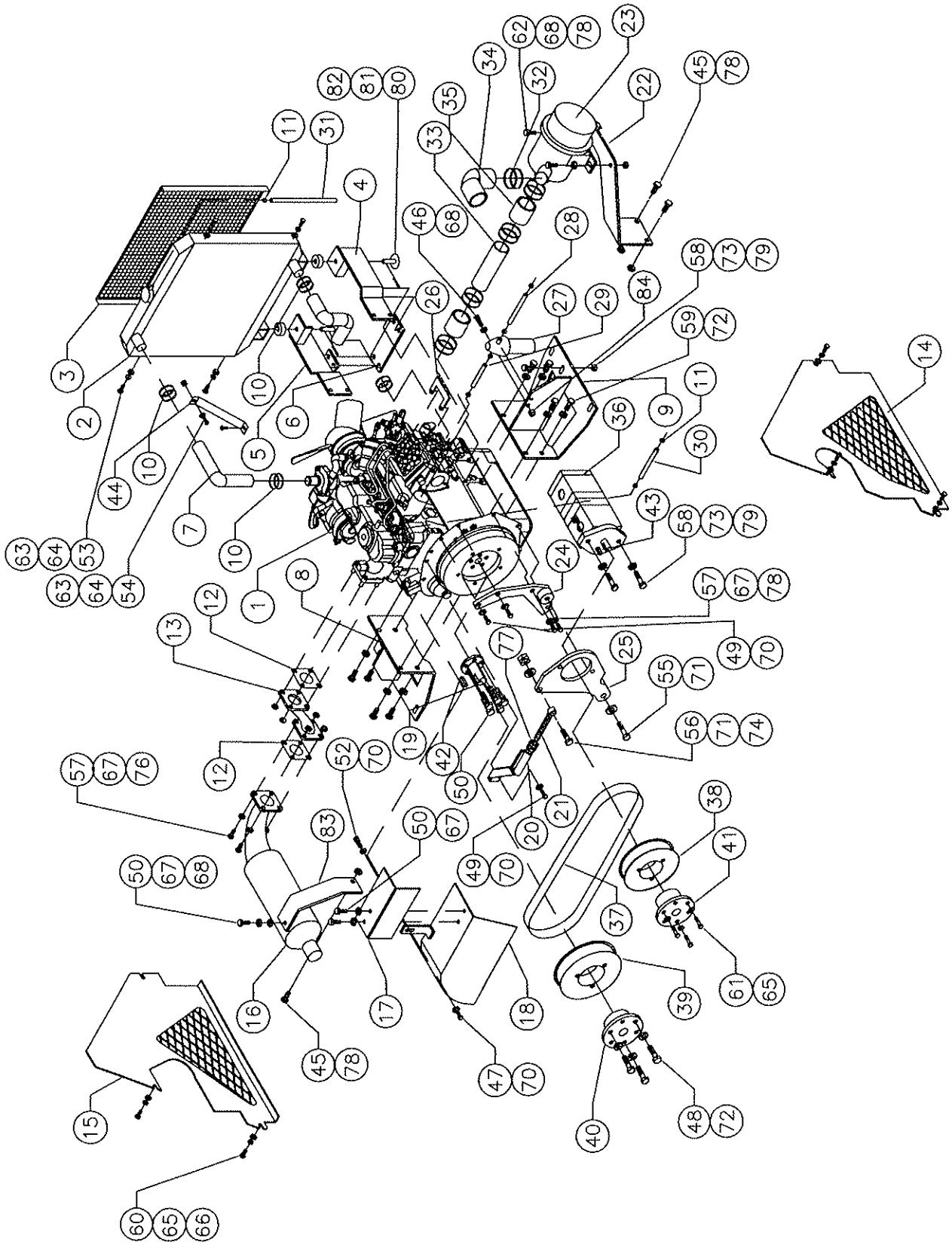

PARTS LIST - KUBOTA D902 DIESEL ENGINE

ITEM	PART NO.	DESCRIPTION	QTY.
1	1190095	D902-BBS1 KUBOTA ENGINE	1
2	1234538	KUBOTA RADIATOR	1
3	1234539	RADIATOR GUARD	1
4	1234540	LEFT RADIATOR MOUNT	1
5	1234541	RIGHT RADIATOR MOUNT	1
6	1234542	RADIATOR BRACE	1
7	1234543	RADIATOR OUTLET HOSE	1
8	1234366	RIGHT ENGINE MOUNT	1
9	1234365	LEFT ENGINE MOUNT	1
10	1190054	1 1/2" HOSE CLAMP	4
11	1123184	1/2" HOSE CLAMP	7
12	1234544	MUFFLER GASKET	2
13	1234376	MUFFLER EXTENSION	1
14	1234402	KUBOTA LEFT SIDE SHIELD	1
15	1234403	KUBOTA RIGHT SIDE SHIELD	1
16	1234545	KUBOTA MUFFLER ASSEMBLY	1
17	1234388	BELT SHIELD EXTENSION	1
18	1234387	BELT SHIELD	1
19	1234356	KUBOTA STUB SHAFT	1
20	1234375	FEMALE TENSIONER	1
21	1234370	TENSIONER	1
22	1234380	AIR CLEANER MOUNT	1
23	1234546	AIR CLEANER ASSEMBLY	1
24	1234361	ENGINE MOUNT	1
25	1234358	PUMP MOUNT	1
26	1234386	THROTTLE MOUNT	1
27	1234547	FUEL FILTER ASSEMBLY	1
28	1234396	1/4" FUEL LINE, 42" LONG	1
29	1234397	1/4" FUEL LINE, 11" LONG	1
30	1234398	1/4" FUEL LINE, 58" LONG	1
31	1234548	1/4" DRAIN LINE, 28" LONG	1
32	1123297	2.25" HOSE CLAMP	5
33	1234426	KUBOTA INTAKE PIPE	1
34	1234550	AIR CLEANER SNORKEL HOSE	1
35	1127499	AIR CLEANER HOSE, 1 5/8" X 3" LONG	2
36	1190063	HYDRAULIC PUMP, SEE HYD. LAYOUT	1
37	1234503	960-8M-30 BELT	1
38	1234500	P56-8M-30 SHEAVE	1
39	1234536	P64-8M-30 SHEAVE	1
40	1234537	SKx1 BOLT ON HUB	1
41	1234502	SDSx5/8 BOLT ON HUB	1
42	1105190	1/4" KEY x 1" LONG	1
43	W/ PUMP	3/16" KEY x 1" LONG	1
44	1234395	RAD STRAP	1
45	1102001	3/8" UNC HEX BOLT, 1" LONG	3
46	1101956	5/16" UNC HEX BOLT, 3" LONG	1
47	1107365	M8x1.25 HEX BOLT, 16mm LONG	1
48	1107424	M10x1.25 HEX BOLT, 40mm LONG	3
49	1107358	M8x1.25 HEX BOLT, 25mm LONG	3
50	1101949	5/16" UNC HEX BOLT, 3/4" LONG	4
51	1107421	M10x1.25 SOCKET HEAD BOLT, 40mm LONG	5

52	1107357	M8x1.25 HEX BOLT, 20mm LONG	1
53	1107310	M6x1.0 HEX BOLT, 10mm LONG	4
54	1107305	M6x1.0 HEX BOLT, 12mm LONG	2
55	1102054	1/2" UNC HEX BOLT, 2.25" LONG	1
56	1102051	1/2" UNC HEX BOLT, 1.5" LONG	1
57	1101950	5/16" UNC HEX BOLT, 1" LONG	6
58	1101998	3/8" UNC HEX BOLT, 1.25" LONG	8
59	1107420	M10x1.25 HEX BOLT, 25mm LONG	12
60	1101923	1/4" UNC HEX BOLT, 0.75" LONG	6
61	1101925	1/4" UNC HEX BOLT, 1.25" LONG	3
62	1101955	5/16" UNC HEX BOLT, 2.5" LONG	2
63	1107099	M6 LOCKWASHER	5
64	1107098	M6 FLATWASHER	5
65	1102588	1/4" LOCKWASHER	9
66	1102607	1/4" FLATWASHER	6
67	1102608	5/16" LOCKWASHER	9
68	1102589	5/16" WASHER	4
70	1107067	M8 LOCKWASHER	9
71	1102592	1/2" LOCKWASHER	2
72	1107069	M10 LOCKWASHER	15
73	1102609	3/8 WASHER	8
74	1102535	1/2" UNC NUT	1
75	1107143	M8x1.25 LOCKNUT	4
76	1102520	5/16" UNC HEXNUT	6
77	1102537	1/2" UNC LOCKNUT	2
78	1102521	5/16" UNC LOCKNUT	5
79	1102536	3/8" UNC LOCKNUT	8
80	1234555	RADIATOR MOUNT PIN	2
81	1234556	RADIATOR VIBRATION MOUNT	4
82	1234557	3/32" HAIR PIN	2
83	1234404	MUFFLER MOUNT	1
NS	1234551	KUBOTA KEY SWITCH (NOT SHOWN)	1
NS	1234552	REPLACEMENT OIL FILTER (NOT SHOWN)	1
NS	1234553	REPLACEMENT FUEL FILTER (NOT SHOWN)	1
NS	1234554	REPLACEMENT AIR FILTER (NOT SHOWN)	1
NS	1234369	RADIATOR COVER (NOT SHOWN)	1
NS	1102699	1/4" UNC WINGNUT (NOT SHOWN)	1

HYDRAULIC OIL COOLER ASSEMBLY (OPTIONAL)

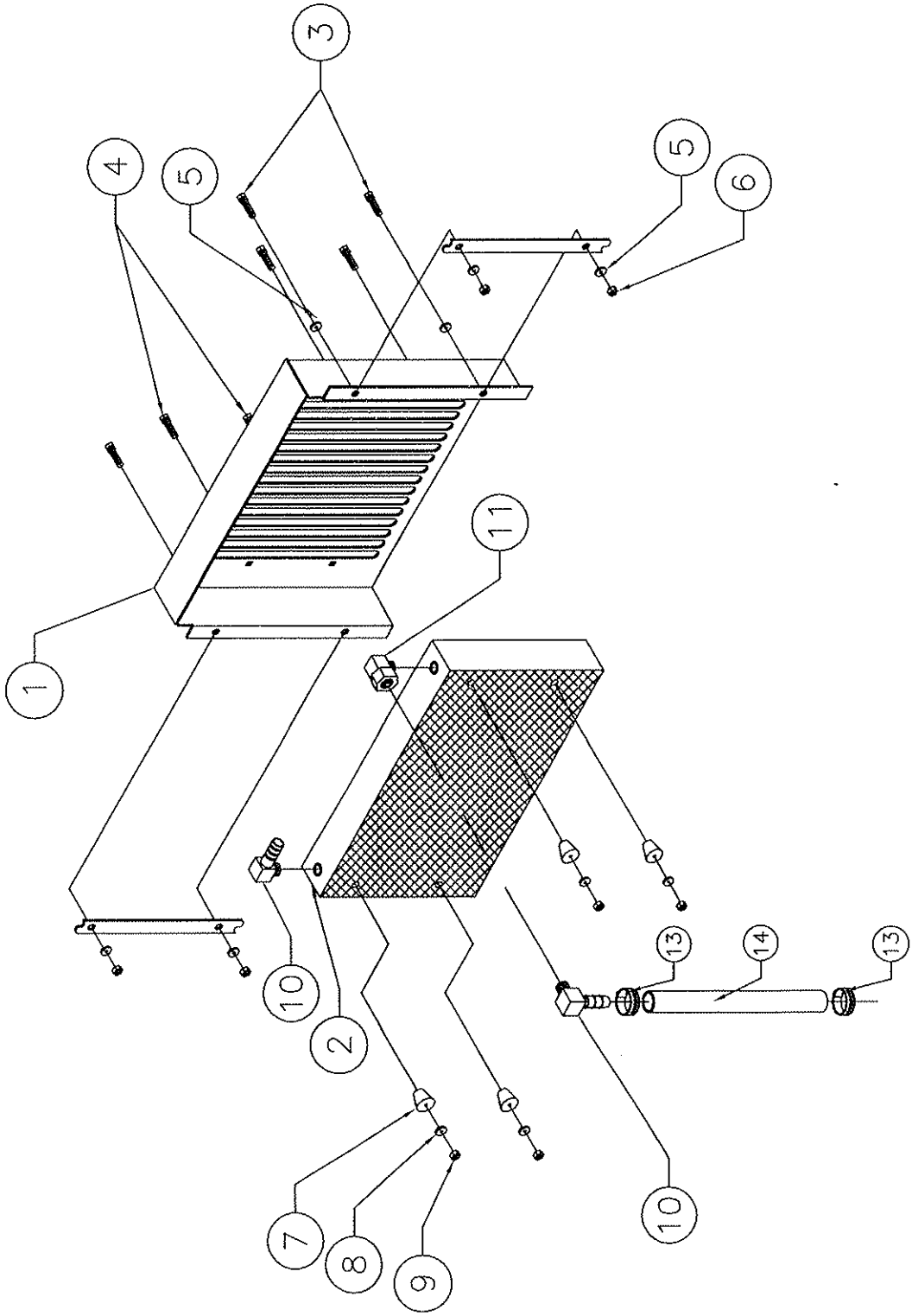

PARTS LIST - HYDRAULIC OIL COOLER

ITEM	PART NO.	DESCRIPTION	QTY.
1	1234574	OIL COOLER COVER	1
2	1234572	OIL COOLER	1
3	1101923	1/4" X 3/4" HEX HEAD BOLT	4
4	1102396	5/16" X 2 1/2" CARRIAGE BOLT	4
5	1102607	1/4" FLATWASHER	8
6	1102516	1/4" LOCKNUT	4
7	1234573	VIBRATION MOUNT	4
8	1102608	5/16" FLATWASHER	4
9	1102521	5/16" LOCKNUT	4
10	1190043	90 ELBOW, 3/4" NPTM X 3/4" HOSE BARB	2
11	1124468	90 ELBOW, 3/4" NPTM X 3/4" NPTF	1
13	1190054	3/4" GEAR CLAMP	3
14	1190050	3/4" X 32" SUCTION HOSE	1
15	1190100	COOLER PADDING (NOT SHOWN)	1